Coffee Machine

Siro Touch 1400 series

Uni brewer – Bean to Filter

User Manual

Picture: SiroTouch 1400 series

Disclaimer Manufacturer:

Although this user manual has been put together with the utmost care, J.M. de Jong Duke automatenfabriek b.v. accepts no liability for inaccuracies or omissions. No liability is accepted for the consequences arising from operation of the equipment in accordance with the information contained in these instructions.

J.M. de Jong Duke automatenfabriek b.v. reserves the right to alter specifications at any time and without prior notification to the purchaser

All rights reserved

Copyright:

J.M. de Jong Duke automatenfabriek b.v. © 2011

The contents of this manual are copyrighted. Texts, images, and source files may only be used for professional purposes.
No part of this guide may be reused, modified, or published without the prior written permission of the manufacturer.
Printing pages is allowed only for professional use.

Manufacturer:

De Jong DUKE
Postbus 190
3360 AD SLIEDRECHT
The Netherlands

+31 (0) 184 496767
+31 (0) 184 416059
www.dejongduke.com
support@dejongduke.nl

De Jong DUKE North America
12680 Delta Street
Taylor, MI, 48180
U.S.A.

+1 734 403 1708
+1 734 403 1712
www.dejongduke.com
support@dejongduke.com

The machine supplier/ dealer is:

Company name: .....
Address: .....
Area code – City: .....
Country: .....
Telephone: .....
Fax: .....
Internet: .....
e-mail: .....

For service and support, always contact the dealer / supplier of the machine by using the telephone service number below.

Tel. Service Number: .....

Preface:

- Carefully read this instruction manual before you operate the machine.
- Keep this manual in a safe place for possible later reference.
- The manual cannot be regarded as a replacement for the training and instruction, but must be seen as an addition to the training, and as a reference work.
- This user's manual is valid for the machine supplied by the manufacturer, including the options installed by the manufacturer. The manufacturer accepts no liability for any damage resulting from incorrect or improper use of the machine, or resulting from modifications that have not been authorized by the manufacturer.
- This manual gives instructions on the operation and maintenance of the machine. Moreover, it gives solutions to simple malfunctions that may occur. The instructions in some paragraphs are meant only for persons who are trained in the operation and maintenance of the machine.
- Besides this manual, a technical manual is also available.
  This technical manual gives directions for solving machine malfunctions and repairing the machine.
- For instructions on the installation of the machine, a separate installation manual is available.
- Always use original parts from the manufacturer when the machine needs to be repaired.
- Only properly trained personnel may carry out repairs, install the machines, or transport the machines.

Index:

Disclaimer Manufacturer: 2
Copyright: 2
Manufacturer: 2
The machine supplier/ dealer is: 3
Preface: 3
Index: 4
1. Safety 5
1.1 Safety and Risk levels: 5
1.2 Safety and Warnings 6
1.3 Standards and norms: 7
2. Description of the machine: 8
2.1 General: 8
2.2 The front of the machine: 8
2.3 Overview of the machine interior: 9
2.4 Type plate: 10
2.5 Technical specifications: 11
3. Before use: 12
3.1 Installation: 12
3.2 Operation site: 12
3.3 Putting the machine out of order: 12
3.4 Measure of cup and jug heights: 13
4. Operation: 14
4.1 Operating the machine in free vend mode: 14
4.2 Operating the machine in pay mode: 14
4.3 Jug dispensing: 15
5. Maintenance and filling: 16
5.1 Daily maintenance 16
5.2 Weekly maintenance: 17
5.3 Monthly maintenance: 18
Cleaning the canister with water: 18
Cleaning the brewer with water: 18
5.4 Place safety key: 19
5.5 Cleaning cycle for coffee brewer: 20
5.6 Fill canisters: 21
5.7 Fill up bean canister: 23
5.8 Change filter paper: 25
5.9 Removal of the brewer: 26
5.10 Install the brewer: 27
5.11 Assembling and disassembling the brewer chamber: 28
5.12 Disassembling the mixing system: 29
5.13 Assembling the mixing system: 31
6. Failure and Error messages: 33
Document control: 34
Notes: 35

1. Safety

1.1 Safety and Risk levels:

Four safety and risk levels are used in this manual.
The risk levels and explanations are described below.

	Danger:	**To warn persons / readers about the possibility of serious or fatal injury to themselves or others.**
	Warning:	**To warn persons / readers about the possibility of minor injury to themselves or others.**
	Caution:	**To warn persons / readers about possible damage to equipment or data or about potential problems in the outcome of what they are doing.**
	Note:	**To emphasize points or remind persons / readers of something, or to indicate minor problems in the outcome of what they are doing.**

1.2 **Safety and Warnings**

The general safety warnings apply to the entire document.
The risk level associated with the explanation below.

	Danger:	**Do not use water in or near the machine unless the instructions contain explicit directions to the contrary.** Risk of electrocution when water comes in contact with internal electrical parts.
		HOT water! The water system (boiler, pipes, etc.) may contain hot water Risk of burning when HOT water comes in contact with a person that can cause a scalding injury.

	Warning:	**Do not shake the machine while in use.** Risk that machine can tip and fall. Risk of electrocution when water comes in contact with internal electrical parts.
		Do not lean on the door when open. Risk that machine can tip and fall.

	Caution:	**Do not use aggressive cleaning products or abrasives to clean (parts of) the machine.**
		Do not use a damaged machine. Please contact your supplier
		If a fault occurs, disconnect the machine from the electrical and water supplies. Please contact your supplier immediately.

	Note:	Keep this manual near the machine, so the manual is immediately available.
		Use the machine only in areas where trained personnel can monitor the operation.
		Damaged water connection tubes may only be repaired by trained personnel.
		The water connection must conform to local regulations.
		Do not use an extension cord.

1.3 **Standards and norms:**

The machine is build according to CE norms

The machine complies with the following standards:
- Machine standard: 89/392/EEG
- EMC standard: 89/336/EEG,

The machine complies with the following norms:
- EN 292: safety of machines.
- UL and cUL 751: norm vending machines (only if sign is on type plate)

2. Description of the machine:

2.1 General:

	Warning:	**Hot drinks are dispensed from the machine** Take care to avoid scalding yourself.
		If cups or jugs are not correctly placed The machine will spill hot liquid down the front. This can cause serious burns.
		The outlet of the machine may occasionally drip hot liquid even when the machine is not in use. When the hot water comes in contact with a person, this can lead to serious burns.
		The water system (boiler, tubes etc.) contains hot water with a temperature close to the boiling point <100 °C. When the hot water comes in contact with a person, this can lead to serious burns.

The machine is a compact semi-automatic machine for the preparation and vending of hot drinks. Your supplier can adjust the taste and sizes of the drinks.

2.2 The front of the machine:

The machine can be operated using the operating panel on the door. By pushing one of the selection buttons on the screen, a product choice can be made.
Before you dispense a beverage, a cup must be placed under the tap.

2.3 Overview of the machine interior:

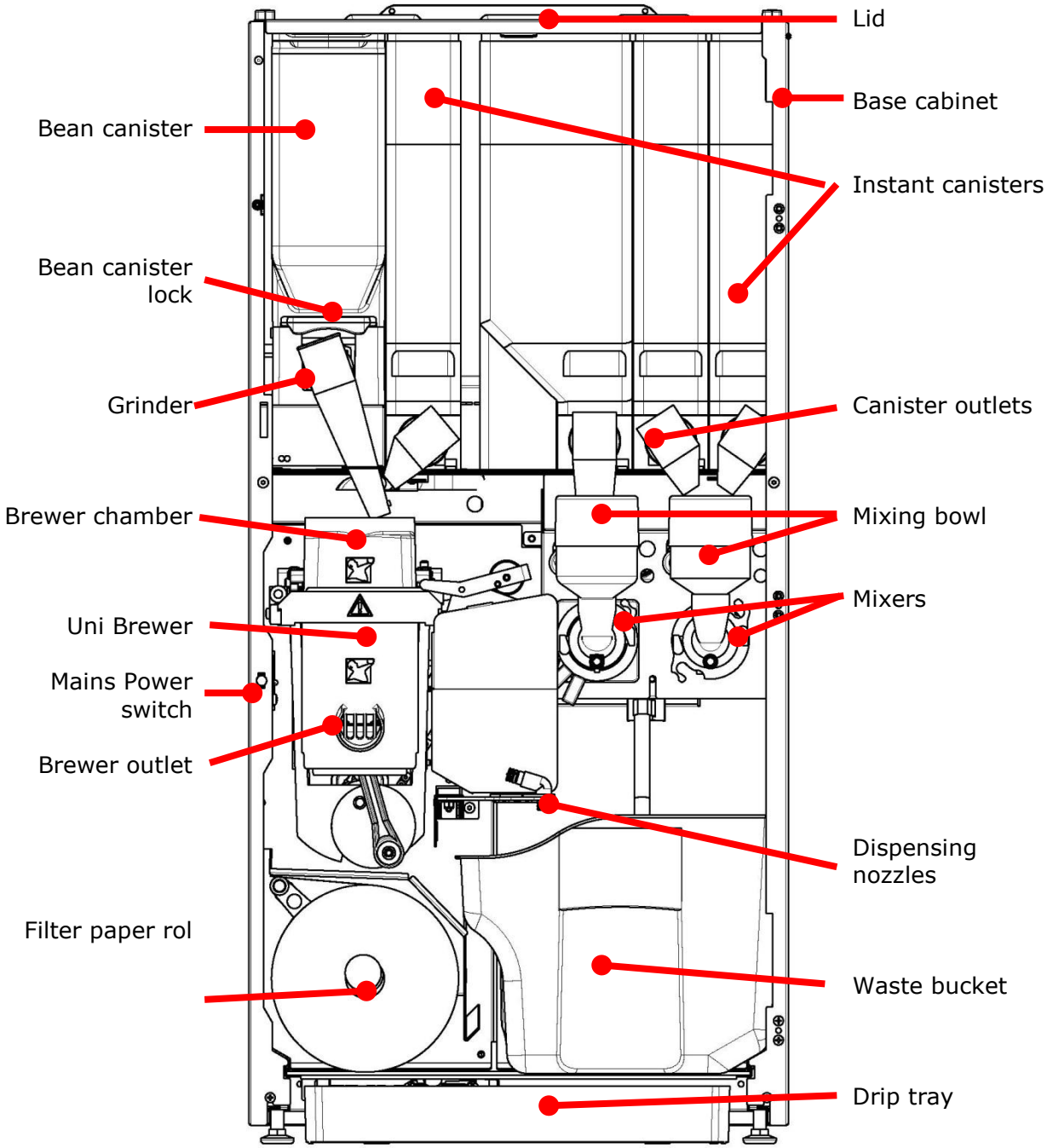

2.4 **Type plate:**

The type plate is mounted on the inside of the machine, at the top left.
The following data is mentioned on the type plate:

- Name of manufacturer

- Serial number
- Type/model specification
- Model specification
- Mains power specification
- Production date
- Water connection specification

Remark: data on type plate differs based on model.

2.5 **Technical specifications:**

Dimensions of the machine:						
Height:	855	mm		31.2	in	
with bean extended canister:	870	mm		34.2	In	
Width:	465	mm		16.9	in	
Depth:	530	mm		20.9	in	
Weight (empty):		50	Kg	+/- 10	%	
		110	lb.	+/- 10	%.	
Electricity:						
Mains supply (Europe):	230	V AC		+/- 10	%	
Frequency:	50 ~ 60	Hz		+/- 2	%	
Max. capacity:	2,4	kW				
Mains supply (North America):	115	V AC		+/- 10	%	
Frequency:	50 ~ 60	Hz		+/- 2	%	
Max. capacity:	1.2	kW				
Water pressure:						
Minimum pressure:	90	kPa	(0,9 bar)			
Maximum pressure:	600	kPa	(6,0 bar)			
Water connection:	¾	BSP connection				
Sound pressure:	< 70	dB(A)				
Ambient temperature in storage:	+ 5	°C	~	+ 50	°C	
Ambient temperature in operating:	+ 5	°C	~	+ 40	°C	

Optional:

Dimensions of the Base Cabinet:					
Height:	850	mm	33.5	in	
Width:	465	mm	18.3	in	
Depth:	530	mm	20.9	in	

3. Before use:

3.1 **Installation:**

Installation, transportation, and adjustment of the machine is specialized work. Only properly trained service personnel should carry this out.
For instructions about transportation, unpacking, and installation of the machine, see the technical manual.

3.2 **Operation site:**

These machines may only be used indoors, in a hygienic dry room, with a temperature between 5 and 40 degrees Celsius.
Place the machine on a flat, stable surface.

3.3 **Putting the machine out of order:**

If the machine will not be used for a long period of time (for example: during the weekend,) it is recommended to turn off the water supply and the electricity (pulling the plug from the socket is sufficient). This will prevent unnecessary use of energy.

3.4 **Measure of cup and jug heights:**

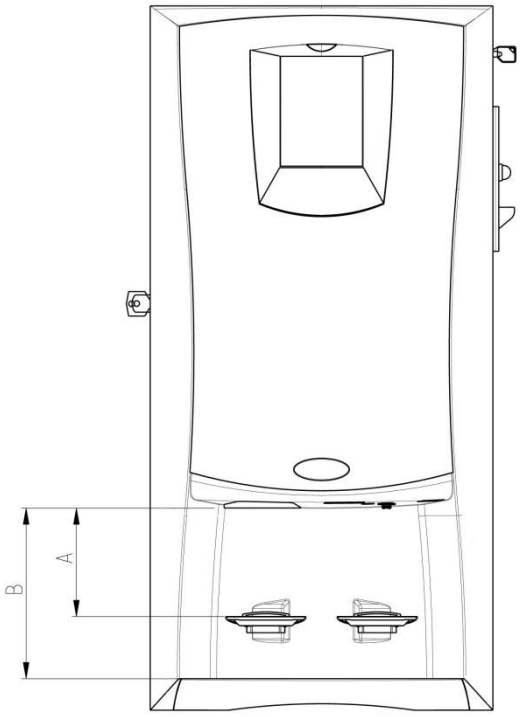

CUP

Max cup diameter:	70	mm	2.76	in

Measure A:
Mounted default

Max cup height:	120	mm	4.72	in

Mounted low

Max cup height:	135	mm	5.31	in

Mounted high

Max cup height:	105	mm	4.13	in

Mounting high is discontinued from serial numbers 201106xxxxxxx

JUG

Max Jug diameter:	135	mm	5.31	in

Measure B:

Max jug height:	190	mm	7.48	in

Min height:
Able to receive a volume of consumptions.

4. Operation:

4.1 Operating the machine in free vend mode:

	Warning:	**Risk of burn injuries when taking out the HOT beverages.** When the hot beverages come in contact with a person, this can lead to serious scalding injuries.
		If cups or jugs are not correctly placed. The machine will spill hot liquid down the front. This can cause serious scalding injuries.
		The outlet of the machine may occasionally drip hot liquid even when the machine is not in use. When the hot liquid comes in contact with a person, this can lead to serious burn scalding injuries.
		The water system (boiler, tubes etc.) contain hot water with a temperature close to the boiling point <100 °C. When the hot water comes in contact with a person, this can lead to serious scalding injuries.
	Note:	**Place the cup in the centre of the cup stand.** All beverage selections are dosed on the left cup stand. Except the selections of hot water and chilled water they are dosed on the right cup stand.

1. Place a cup under the outlet on the cup stand.
2. Select your desired drink.
3. Follow the instructions on the screen.
4. After pressing the start button, the machine prepares your drink and dispenses it into the cup.
5. Your drink is ready after the beep and the message 'ready' is on the screen.

4.2 Operating the machine in pay mode:

In pay mode, first insert the required money and continue with step 1 of the free vend operation.

4.3 **Jug dispensing:**

	Warning:	**Risk of burn injuries when taking out the HOT beverages.** When the hot beverage comes in contact with a person, this can lead to serious scalding injuries.
		If cups or jugs are not correctly placed. The machine will spill hot liquid down the front. This can cause serious scalding injuries.
		The outlet of the machine may occasionally drip hot liquid even when the machine is not in use. When the hot liquid comes in contact with a person, this can lead to serious scalding injuries.
		The water system (boiler, tubes ect.) contain hot water with a temperature close to the boiling point <100 °C. When the hot water comes in contact with a person, this can lead to serious scalding injuries.

1. Push the cup stand up.(picture 4.3.1)
2. Place a jug under the outlet.(picture 4.3.2)
3. Select the jug button.
4. Select the drink and jug size.
5. Select the start button.
6. The machine dispenses the selected drink into the jug.
7. Your drink is ready after the beep and the message 'ready' is on the screen.

Jug placement

picture 4.3.1

picture 4.3.2

5. Maintenance and filling:

5.1 Daily maintenance

Failing to perform the daily maintenance negatively affects the quality of the beverages and can lead to malfunctioning of the machine.

1. Open the door of the machine.
2. Install the safety key (see paragraph: install safety key)

Flush mixers and brewer:

3. Place a jug underneath the nozzle to collect the hot water.
4. Press the "rinse daily" button on the screen. Hot water from the boiler flows through the brewer and mixers.
5. Repeat step 4 until clean water comes out of the machine

Check if there are still enough ingredients in the canisters.
If necessary, fill up the canisters, following instructions in paragraph "*Fill up canisters"*.

Empty waste bucket and drip tray:

1. Remove the drip tray, the cup stand and the drip grid.
2. Remove the drip tray under the brewer.
3. Rinse the drip trays, cup stand and grid in hot water.
4. Remove the waste bucket
5. Empty the bucket and rinse it in hot water.

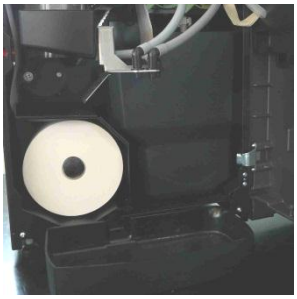

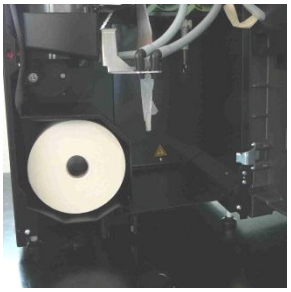

Clean the outside of the machine:

1. Clean the outside of the machine with a soft damp cloth.
2. Install the drip trays, grid, and cup stand.
3. Remove the safety key.
4. Close the door of the machine, and leave the service mode.

5.2 **Weekly maintenance:**

Failing to perform the weekly maintenance negatively affects the quality of the beverages and can lead to malfunctioning of the machine.

1. Open the door of the machine

Clean the mixing system:

2. Remove the mixing system according to paragraph "*Disassembling the mixing bowl*".
3. Rinse out all loose parts of the mixing system in warm water.
4. Clean the parts of the mixing system that remain in the machine with a wet brush.
5. Mount the mixing system according to paragraph "*Assembling the mixing bowl*". Make sure that the parts are dry before you mount them.

   Check if there are still enough ingredients in the canisters.
   If necessary, fill up the canisters, following instructions in paragraph "*Fill up canisters"*.

Clean cycle brewer:

1. Place a jug underneath the nozzle to collect the hot water
2. Install the safety key.
3. Press the "Weekly cleaning cycle brewer" button on the screen.
4. Follow the instructions in the screen:
   a. Press start to close the brewer
   b. Brewer then moves to closed position
   c. Place 1 liter jug under outlet.
   d. Place tablet in brewer.
   e. Press button to run cleaning cycle.
5. Hot water from the boiler flows through the brewer
   See paragraph "cleaning cycle for brewer" for detailed information.

Empty waste and drip tray bucket

1. Open the door.
2. Remove the drip tray, the cup stand and the grid.
3. Rinse the drip trays, cup stand and grid in hot water.
4. Remove the waste bucket
5. Empty the bucket and rinse it in hot water.

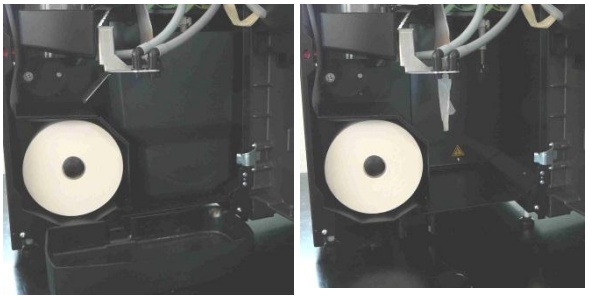

Clean the outside of the machine:

1. Clean the outside of the machine with a soft damp cloth.
2. Install the drip trays, grid and cup stand.
3. Remove the safety key
4. Close the door of the machine, and leave the service mode.

5.3 **Monthly maintenance:**

Failing to perform the monthly maintenance negatively affects the quality of the beverages and can lead to malfunctioning of the machine.
Apart from the weekly maintenance, the following tasks must be performed monthly to ensure the machine operates correctly and optimal beverage quality is maintained.

Cleaning the canister with water:

1. Open the door.
2. Lift the upper lid.
3. Remove the canister from the machine.
4. Remove the lid from the canister.
5. Empty the canister.

	Warning:	**Do not fill the canister while it is not completely dry**. The product may form lumps, which makes the system unusable.

6. Rinse out the canister with warm water until all product residues are removed.
7. Dry the canister very thoroughly on the inside and outside.
8. Fill the canister and place it back in the machine according to the procedure in paragraph "*Fill canisters*".

Cleaning the brewer with water:

1. Remove the brewer from the machine according to the procedure in paragraph "Removal of the brewer".
2. Rinse the brewer with warm water.
3. Place the brewer back according to the procedure in paragraph "Install the brewer".

5.4 **Place safety key:**

	Warning:	**The machine is now powered up with open door.** Parts in the machine can move automatically and hot water can flow out.

Open the door and locate the safety key.
Insert the safety key and turn a quarter turn clockwise or counter clockwise.

5.5 **Cleaning cycle for coffee brewer:**

Run the cleaning cycle for the coffee brewer weekly using the cleaning tablet.

	Note:	**Not cleaning the brewer can cause the machine to malfunction!**
	Note:	**Failure to clean the brewer weekly with the cleaning tablet delivered by the manufacturer will void the warranty on related parts.**

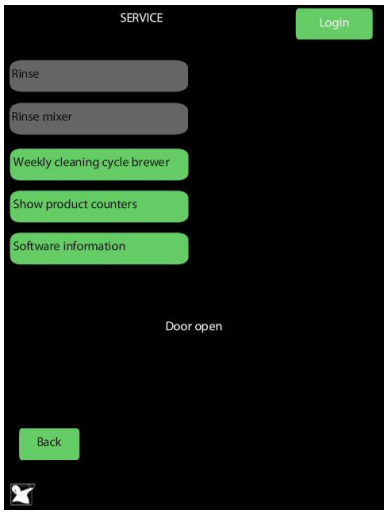

1. Open the door of the machine.
2. The service menu is displayed.
3. Select the *weekly cleaning cycle* button.

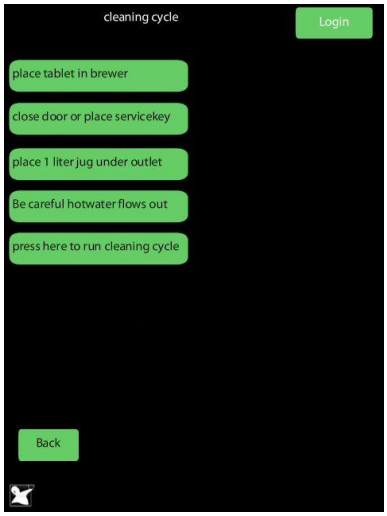

4. Follow the instructions on the screen of the "Cleaning Cycle"
5. Select start to close the brewer.
6. Brewer moves now to closed position
7. Place de safety key in the door
8. Place tablet in brewer.
9. Place 1 liter jug under outlet
10. Select the button to run cleaning cycle

11. The cleaning cycle is started and takes ± 5 minutes. Wait till the cycle is finished
12. Close the door and run a test consumption to test the machine

5.6 **Fill canisters:**

Do not fill the canisters further than necessary for one or two days. This will keep the products fresh. Make sure that the canisters remain filled with a layer of at least 4-cm of product. Only use products that are recommended by the supplier of the machine.

1. Filling the canisters must be done outside the machine. To facilitate taking out the canisters, the lid of the machine can be flipped up (after opening the door).

   Perform the following procedure to fill a canister:

2. Turn the nozzle of the canisters upwards

3. Slightly lift up the canister at the front, until the positioning ridge comes out of the hole.

4. Pull the canister towards the front and take it out of the machine.

5.6 **Fill canisters:**

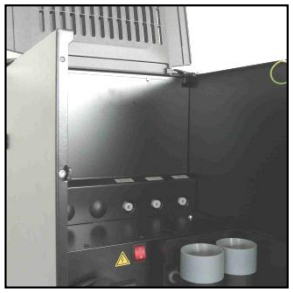

5. Fill the canister with the product indicated on the canister. Place the lid back on the canister.

6. Place the canister back in the machine. Make sure the drive at the back of the canister fits well on the motor drive.

7. Push the canister at the front over the positioning ridge.

8. Turn the nozzle of the canister downwards.
   Check the position of the nozzle of the canister. It must be positioned correctly above the brewer or mixing bowl.
9. Close the door or place safety key.
10. Flush the mixers.
    This is necessary because product may fall into the mixers when the canister is place back into the machine.
11. Check correct functioning by taking test beverages.

Picture may be different based on model.

5.7 **Fill up bean canister:**

	Note:	**When filling the bean canister the green locking handle must be fully pulled out.** When the green handle is not fully pulled out it is possible that coffee bean can fall out

1

2

3

1. Open the door.
2. Locate the green locking handle under at the bean canister.
3. Pull the green locking handle towards you to unlock the canister.
4. Lift the bean canister up and take it out the machine.
5. Place the bean canister on a stable ground.

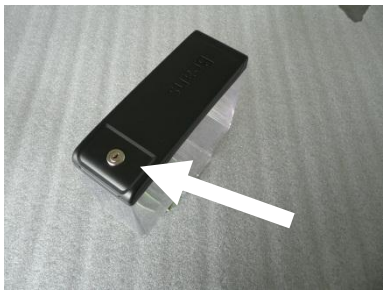

5 & 6

7

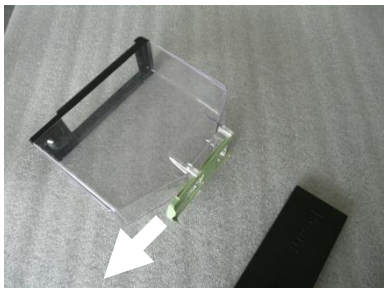

8

6. Place the key into the lock of the canister lid.
7. Unlock the canister lid.
8. Remove the canister lid.

8 Check the position of the green handle is fully pulled out.
When the green handle is not fully pulled out it is possible that coffee bean can fall out.

9 Fill the canister with fresh coffee beans.

10 Place the lid back on the canister and lock it.

5.7 **Fill up bean canister:**

11

12

13

9. Place the bean canister back into the coffee machine on the 4 position ridges of the grinder.
10. Posh the green locking handle back to lock the bean canister on the grinder.
11. Close the upper coffee machine lid.
12. Controleer de werking door een testconsumptie te nemen.

5.8 **Change filter paper:**

	Caution:	**Make sure that the brewer is not moved down during lifting of the transport wheels**. Push the cantilever down with your thumb while supporting the brewer with your index finger.

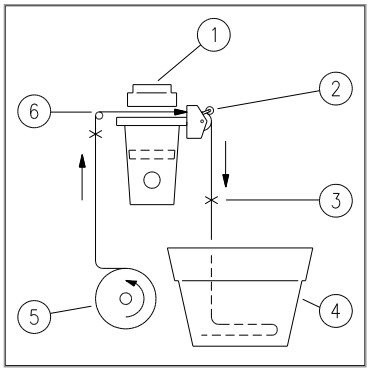

1

Perform the following procedure for changing of the paper roll:

13. Open the door of the machine.
14. Install the safety key.
15. Tear off the filter paper for the brewer.
16. Press the *replace filter paper* button. Wait till the brewer turns to the "open" position
17. Remove the old filter paper (3) from the brewer (1), lifting the transport wheels (2) with the cantilever if necessary.
18. Place the new roll filter paper and guide the filter paper to the brewer and transport wheels.
19. Push button *replace filter paper*. The brewer moves a cycle and stops.
20. Check if the filter paper is being transported correctly, and that no folds and creases are in the paper.
21. Check the functioning of the machine by taking a test drink (coffee).

5.9 **Removal of the brewer:**

Removal of the brewer is necessary for performing the monthly maintenance. Only properly trained personnel may work on the brewer itself. Instructions for performing work on the brewer are described in the technical manual.

	Caution:	**Make sure that the machine is switched off and cannot be accidentally switched on.**

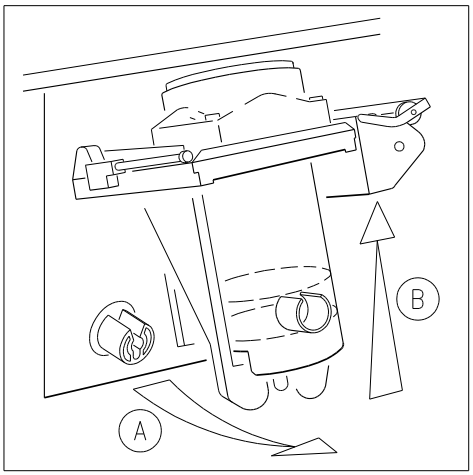

Carry out the following procedure for removal of the brewer:

1. Open the door of the machine.
2. Move up the lid of the machine.
3. Take out the canisters of the machine.
4. Tear off the filter paper to the left and right of the brewer
5. Remove the nozzle of the brewer.
   Take the brewer out of the machine by pulling the bottom to the front and slide the brewer upward out of the suspension

5.10 **Install the brewer:**

Installationof the brewer is necessary for performing the monthly maintenance. Only properly trained personnel may work on the brewer itself. Instructions for performing work on the brewer are described in the technical manual.

	Caution:	**When the machine is switched on, you should take the utmost care when performing the functions via the internal service panel.**

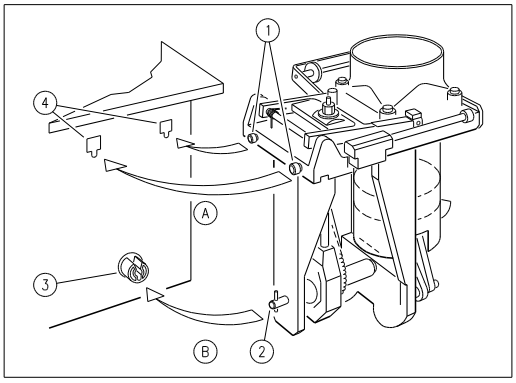

Carry out the following procedure to install the brewer:

1. Make sure the brewer is in stand-by mode; the interlocking (B) must be right adjusted.
2. You can adjust the drive of the brewer with the blue brewer key, delivered with the machine.
3. Place the brewer with both ridges (1) in both holes (4), see (A).
4. Push the bottom backwards, so that the drives (2) of the brewer and the motor are interlocking.
   This may take some force, see (B).
5. Place the outlet pipe on the brewer.
6. Guide the filter paper through (see paragraph *change filter paper*).
7. Switch the machine on.
8. Push button *replace filter paper* to move the brewer through a cycle.
9. Check if the filter paper is being transported properly.
10. Check the functioning of the machine by taking a test drink

5.11 **Assembling and disassembling the brewer chamber:**

Removal of the brewer is necessary for performing the monthly maintenance. Only properly trained personnel may work on the brewer itself. Instructions for performing work on the brewer are described in the technical manual.

	Caution:	**When the machine is switched on, you should take the utmost care when performing the functions via the internal service panel.**

Disassembling the brewer chamber:

1. Press *Replace filter paper* button.

2. Remove brewer chamber by pulling it towards you

Assembling the brewer chamber:

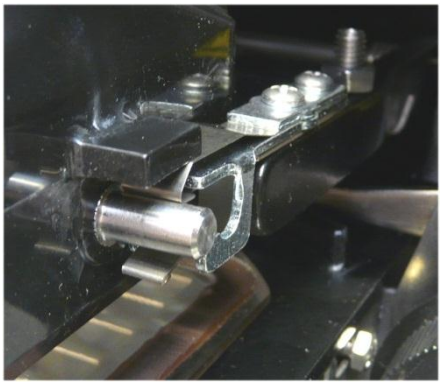

1. Press the brewer chamber with the two pins into its position.

2. Press the *replace filter paper* button to check if the brewer runs a cycle smoothly.

5.12 **Disassembling the mixing system:**

1. Open the door.
2. Remove the mixers using the following procedure.

3. Remove the outlet pipes from the mixers.

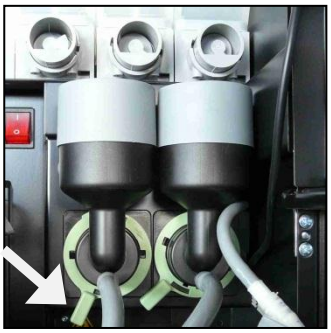

4. Turn the bayonet catch counterclockwise (approx. 10º).

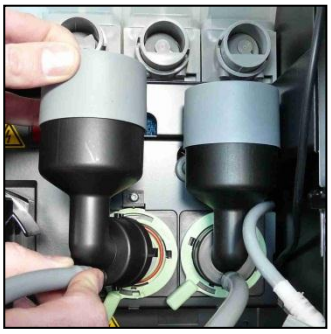

5. Remove the mixer house.

5.12 **Disassembling the mixing system:**

6. Pull the mixer parts towards you.

7. Pull the whipper blade towards you and off the shaft.

8. Turn the base plate counterclockwise and pull it towards you.

9. Ready

Picture may be different based on model.

5.13 **Assembling the mixing system:**

1. Procedure to assemble the mixer.

2. Install the base plate.

	Caution:	**The arrow on the whipper blade must on the flat side of the mixer shaft.**

3. Install the whipper blade.

   Be sure that the arrow is at the flat side of the shaft.

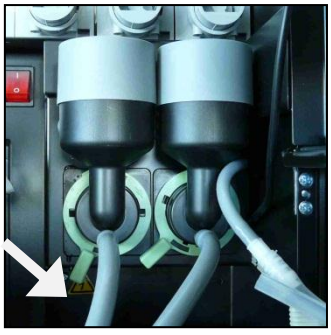

4. Install the mixer house.

5.13 **Assembling the mixing system:**

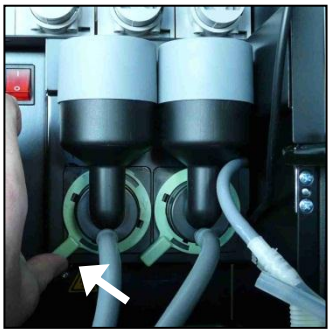

5. Turn the bayonet catch clockwise until it is locked.

6. Install the outlet pipes on the mixers.
7. Close the door.
8. Check correct functionality by taking test beverages.

Picture may be different based on model.

6. Failure and Error messages:

Always check whether an error message is shown on the display. If no error message is shown and the machine does not work correctly, you may find the possible cause and solution in the following table. For failures not mentioned in this manual, contact the service engineer.

Rinse brewer with tablet
The weekly cleaning cycle is required. Run the cleaning cycle and the message will disappear.

Brewer not in home position
Consult the service engineer

Communication error
Consult the service engineer

Cleaning Error
Cleaning cycle did not finish. Run the cleaning cycle again and finish it correctly.

Door open
Close door or install service key to run the machine.

Drip tray/waste bucket full
Empty the drip tray in front of machine and the waste bucket, make sure the probes are dry.

Filling boiler
Wait until boiler is filled.
If message is still shown after 10 minutes, consult the service engineer

Grinder blocked
Grinder is blocked and needs to be cleaned out

Heating boiler
Wait until boiler is heated.
If message is still shown after 10 minutes, consult the service engineer

Install new filter paper
Filter roll is empty. Install a new filter roll

Mixer blocked
Clean the mixing bowl

No water connected
No water detected for more than 2 minutes in open boiler system.
Open and close the machine door for restart.

Open boiler leaking, inlet closed
A leak is detected. Close water tap and consult the service engineer.

Place cup left or Place cup right

Cup needs to be placed under the dispenser before the start button is available.

Water filter installed?
Consult the service engineer.

Replace water filter
Consult the service engineer

Shortcut temp.sensor
Consult the service engineer

Temp. sensor disconnected
Consult the service engineer

Temp. boiler to high
Consult the service engineer

Water level to low
Consult the service engineer

Document control:

Date:	Version:	Reason of change:	Resp.
2012-10-05	v01-00	Initial release	DH
2013-02-04	v01-01	correction specification	DH

Notes: